1812 AS

Engineer's Kit : EK-1812AS-X

Chip Inductors for RF Applications (Wire wound -open)

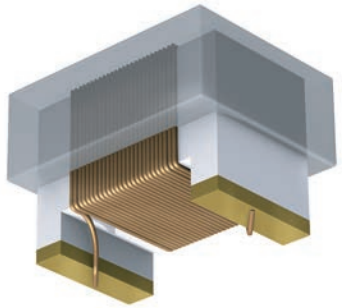

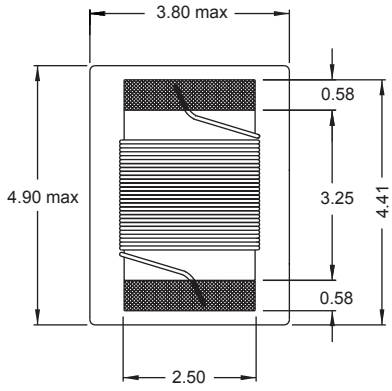

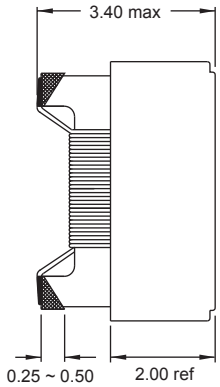

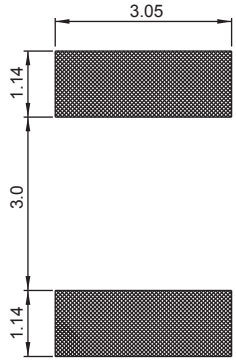

recommended layout for solder pads

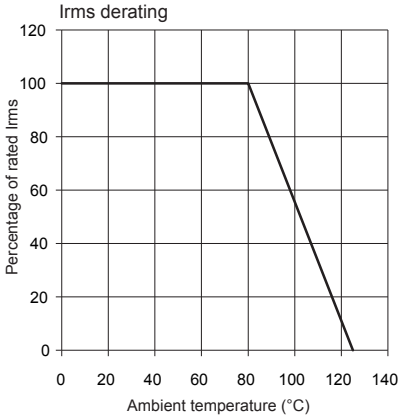

Current carrying capacity dependent on the ambient temperature

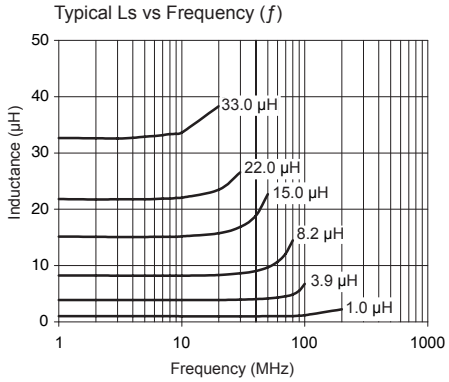

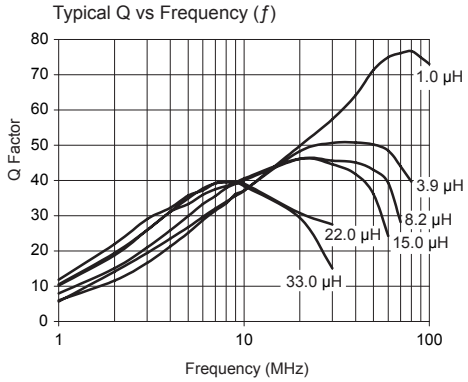

Part No	Inductance L (µH)	f_L (MHz)	Tol ± (%)	Q min	f_Q (MHz)	SRF (MHz)	DCR max (Ω)	Rated DC Current (mA)
1812AS-1R0K-YY	1.0	7.9	10	62	50	277 min	1.2	480
1812AS-1R2K-YY	1.2	7.9	10	60	50	240 min	1.2	480
1812AS-1R5K-YY	1.5	7.9	10	60	50	220 min	1.6	430
1812AS-1R8K-YY	1.8	7.9	10	60	50	200 min	2.0	380
1812AS-2R2K-YY	2.2	7.9	10	63	50	180 min	2.2	340
1812AS-2R7K-YY	2.7	7.9	10	63	50	160 min	3.2	300
1812AS-3R3K-YY	3.3	7.9	10	50	50	145 typ	3.8	270
1812AS-3R9K-YY	3.9	7.9	10	50	50	130 typ	5.0	240
1812AS-4R7K-YY	4.7	7.9	10	50	50	120 typ	5.4	230
1812AS-5R6K-YY	5.6	7.9	10	40	50	105 typ	5.7	220
1812AS-6R8K-YY	6.8	7.9	10	40	50	103 typ	6.6	210
1812AS-8R2K-YY	8.2	7.9	10	38	50	94 typ	7.0	200
1812AS-100K-YY	10	7.9	10	38	50	80 typ	7.7	190
1812AS-120K-YY	12	2.5	10	38	10	74 typ	8.7	180
1812AS-150K-YY	15	2.5	10	37	10	59 typ	9.6	170
1812AS-180K-YY	18	2.5	10	36	10	59 typ	10.5	160
1812AS-220K-YY	22	2.5	10	36	10	45 typ	13.0	155
1812AS-270K-YY	27	2.5	10	36	10	35 typ	14.0	150
1812AS-330K-YY	33	2.5	10	36	10	35 typ	15.5	145
1812AS-390K-YY	39	2.5	10	32	10	25 typ	23.5	80
1812AS-470K-YY	47	2.5	10	32	10	20 typ	39.0	80
1812AS-560K-YY	56	2.5	10	32	10	20 typ	41.0	60
1812AS-680K-YY	68	2.5	10	32	10	18 typ	54.0	58
1812AS-820K-YY	82	2.5	10	32	10	15 typ	59.0	55

Single layer (typ)

Core Material : Ceramic

Revision date : 25 Aug 2014

SPQ : Taped / Reel 600 [-01]
2200 [-04]

Remarks: - For not listed inductance values please check availability with us.
- 2% and 5% tolerance available on request.
- This series is also available as non-magnetic, part numbering ASM.

● All dimensions in mm